ADDISON

DEDICATED OUTDOOR AIR SPECIALISTS

MI INDOOR VERTICAL SYSTEM

As buildings become more diverse, more versatile ventilation solutions are required.

At Addison, our drive to provide the best solutions for customers has lead to the development of our all-new modular self-contained indoor dedicated outdoor air system.

The MI Series delivers exceptional performance and versatility over its standard 10 - 45 Ton range. Featuring a compact design, the MI can be installed into confined spaces. It's a perfect match for every application requiring split systems for ventilation or dehumidification. Additionally, It's versatile range of options from remote condenser air source, or water cooled operation make it the best option for any installation. From Retail, Offices, Hospitality, and more, the new MI Series is a perfect fit for your next project.

STANDARD & OPTIONAL FEATURES:

- Capacity from 10 - 45 Tons
- Dedicated Outdoor Air or Recirculating Dehumidification Operation
- Optional Water-Source Heat Pump Operation
- Airflow from 1,500 - 7,000 CFM (Outdoor Air)
- 2" Double-Wall Foam Insulated Construction (R-13)
- Hinged, Removable Double-Walled Access Doors
- 6-Row Intertwined Air Coils
- Modulating Reheat Circuit
- Switchable SubCooling Circuit
- Scroll Compressors (Optional Lead VFD)
- All-Digital Controls with BAS Integration
- Direct Drive EC Plenum Supply Blowers
- Aluminum and Galvanized Steel Cabinet
- Multiple Service Access Points
- Optional 10,000 Hour Corrosion Protection

MI SERIES DIMENSIONS

MI A CABINET

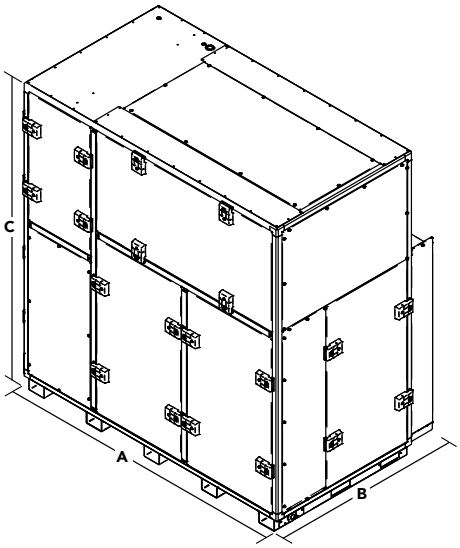

MI B CABINET

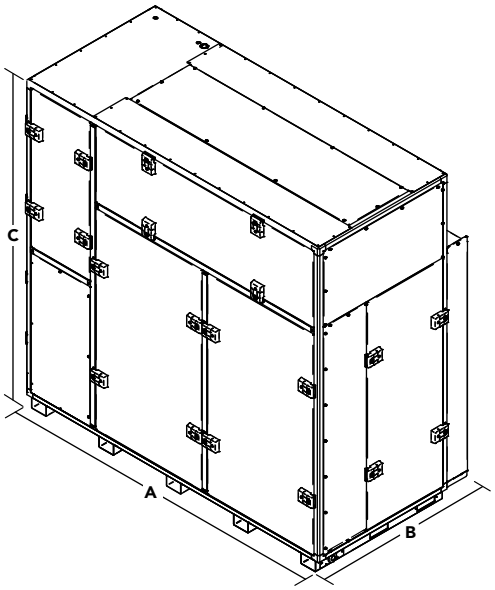

MC OUTDOOR CONDENSING SECTION

MC B2 CABINET (MODEL 120 - 180)

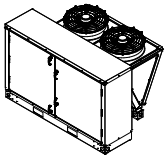

62.25"L X 86.375W X 80.75H

MC C4 CABINET (MODEL 210 - 420)

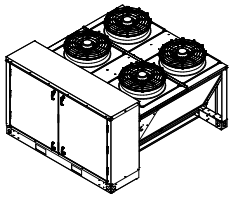

96.75"L X 86.375W X 80.75H

MC D6 CABINET (MODEL 480 - 540)

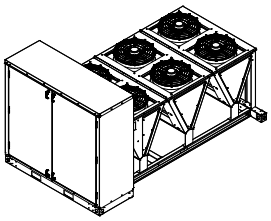

153.5"L X 86.375W X 80.75H

VERTICAL UNIT DIMENSIONS

CABINET:	WIDTH: (A)	DEPTH*: (B)	HEIGHT: (C)
A	82.50 [209.55]	53.125 [134.94]	86.00 [218.44]
B	99.50 [252.73]	53.125 [134.94]	96.25 [244.475]

Note: Dimensions will be dependent on option content, and other field added features. Consult final selection drawings for complete details.

Depth Note* : Includes filter rack (7.875").

AIRFLOW - 100% OUTDOOR AIR

MODEL:	CABINET:	AIRFLOW:
MIO*0120	A	1,500
MIO*0150	A	1,900
MIO*0180	A	2,400
MIO*0210	A	2,600
MIO*0240	A	3,600
MIO*0300	A	4,000
MIO*0360	A	4,500
MIO*0420	A	5,400
MIO*0480	B	5,600
MIO*0540	B	6,800

Note* : Air Cooled (A) or Water Cooled (W)

AIRFLOW - RECIRCULATING

MODEL:	CABINET:	AIRFLOW:
MIR*0120	A	4,000
MIR*0150	A	4,800
MIR*0180	A	6,000
MIR*0210	A	7,200
MIR*0240	A	8,000
MIR*0300	A	10,000
MIR*0360	B	12,000
MIR*0420	B	14,000
MIR*0480	B	15,000
MIR*0540	B	16,500

ADDISON
DEDICATED OUTDOOR AIR SPECIALISTS

ADDISON
7050 Overland Road
Orlando, FL 32810
1-407-292-4400
www.addison-hvac.com

© ADDISON, INC. 2020