INSTALLATION OPERATION and MAINTENANCE MANUAL

100% Outside Air Cooling/Dehumidifying Units
High Efficiency Packaged PCA/DCA Systems

CONTENTS **PAGE**

WARNING: READ SAFE OPERATION RULES AND MANUAL CAREFULLY

APPLICATION

PCA Series endflow packaged and DCA Series Down discharge air conditioners are designed to cool and dehumidify 100% outside air for those applications requiring make up air cooling. These units should not be used as the primary source of cooling or heating the conditioned space.

Safe Operation Rules

Please take a few minutes to read our instructions before you install and use your air conditioner. This will help you obtain the full value from your air conditioner. It will also help you avoid any needless service costs that result from causes we cannot control and cannot cover in our warranty.

Follow these rules and the instructions carefully. Failure to do so could cause a malfunction of the air conditioner, resulting in injury, death and/or property damage.

Check local codes and utility standards. The installation must comply with their rules.

Always shut off electric power before making unit connections or removing any panels.

During installation or servicing, be extremely careful to avoid injury. Components may have sharp edges or protrusions which can cut you. Tubing and compressor(s) contain high pressure refrigerant—they must not be exposed to high temperature or be punctured.

CAUTION

Operational failure of this unit for any reason, including but not limited to mechanical or electrical failure of devices internal or external to the unit, loss of fuel such as natural or LP gas, or interruption of electric power may result in the introduction of large volumes of air into the conditioned space that could cause freeze or other damage to property.

It is the responsibility of the installer and/or user of this unit to provide equipment such as a source of emergency heat, alarm systems, or supervisory systems to warn of such failures.

Form #0527N-0831B (0609)

Insert for all ADDISON® product manuals

Instructions:

In accordance with California Proposition 65 requirements, place enclosed label(s) in a highly visible location on outside of equipment to be repaired (i.e., near equipment's serial plate). See label placement drawing in equipment's Installation, Operation and Service manual for label location (when available). Avoid placing label on areas with extreme heat, cold, corrosive chemicals or other elements. Extra labels are also included where repair of multiple units is involved. To order additional labels, please call +1.407.292.4400.

To obtain a copy of the manual or for more information, visit the applicable website(s) below:

Incluya en todos los Manuales de productos de ADDISON®

Instrucciones:

De conformidad con los requerimientos de la Propuesta 65 de California, ubique la(s) etiqueta(s) adjunta(s) en un lugar bien visible en el exterior del equipo a ser reparado (es decir, cerca de la placa serial). Ver dibujo de instalación de la etiqueta en el Manual de Operaciones y Mantenimiento (si esta disponible). Evite colocar la etiqueta en áreas con calor, frío, productos químicos corrosivos u otros elementos. Se incluyen etiquetas adicionales para el caso de reparación de varias unidades. Para ordenar etiquetas adicionales, por favor llamar al +1.407.292.4400.

Para obtener una copia del manual o para obtener mas información visite los sitios Web correspondientes a continuación.

www.addison-hvac.com

⚠WARNING

This equipment, its related accessories and by-products of operation, contain chemicals known to the State of California to cause cancer and birth defects or other reproductive harm.

⚠ADVERTENCIA

Este equipo, sus accesorios y los productos derivados de su operación contienen productos quimicos que el Estado de California considera causantes de cáncer y defectos de nacimiento u otros daños reproductivos.

Printed in U.S.A./Impreso en EE.UU P/N 91070015 Orig

Installation Code and Annual Inspections: All installation and service of ADDISON® equipment must be performed by a contractor qualified in the installation and service of equipment sold and supplied by Addison and conform to all requirements set forth in the ADDISON® manuals and all applicable governmental authorities pertaining to the installation, service, operation and labeling of the equipment. To help facilitate optimum performance and safety, Addison recommends that a qualified contractor conduct, at a minimum, annual inspections of your ADDISON® equipment and perform service where necessary, using only replacement parts sold and supplied by Addison.
Further Information: Applications, engineering and detailed guidance on systems design, installation and equipment performance is available through ADDISON® representatives. Please contact us for any further information you may require, including the Installation, Operation and Service Manual.
This product is not for residential use.
This document is intended to assist licensed professionals in the exercise of their professional judgment.

Código de Instalación e Inspecciones Anuales: Todas las instalaciones y mantenimientos de productos ADDISON® deben ser realizados sólo por personal cualificado en la instalación y mantenimiento de los equipos vendidos y suministrados por Addison y/o por sus distribuidores y deben cumplir con todos los requisitos dispuestos en los manuales de ADDISON® y con todos los estándares locales aplicables a la instalación, mantenimiento, funcionamiento y etiquetado del equipo. Para conseguir un funcionamiento óptimo y seguro, Addison recomienda que un técnico cualificado revise anualmente sus equipos y realice el mantenimiento siempre que sea necesario, usando exclusivamente piezas de repuesto de ADDISON®.
Información adicional: A través de los distribuidores de Addison está disponible la información sobre aplicaciones, guías detalladas sobre diseño de sistemas e instalación y funcionamiento de los productos. Por favor contacte con nosotros si necesita más información o si requiere un manual de instalación, funcionamiento y mantenimiento.
Este producto no es para uso residencial.
La intención de este documento es la de ayudar a los profesionales autorizados en el libre ejercicio de su profesión.

Addison
7050 Overland Road
Orlando, FL 32810 U.S.A.
Telephone: +1.407.292.4400
Fax: +1.407.290.1329
www.addison-hvac.com

Danger, Warning and Caution

The signal words **DANGER, WARNING** and **CAUTION** are used to identify levels of hazard seriousness. The signal word **DANGER** is only used on product labels to signify an immediate hazard. The signal words **WARNING** and **CAUTION** will be used on product labels and throughout this manual and other manuals that may apply to the product.

Signal Words

DANGER – Immediate hazards which **WILL** result in severe personal injury or death.

WARNING – Hazards or unsafe practices which **COULD** result in severe personal injury or death.

CAUTION – Hazards or unsafe practices which **COULD** result in minor personal injury or product or property damage.

Signal Words in Manuals

The signal word **WARNING** is used throughout this manual in the following manner:

⚠ WARNING

The signal word **CAUTION** is used throughout this manual in the following manner:

CAUTION

Product Labeling

Signal words are used in combination with colors and/or pictures on product labels. Following are examples of product labels with explanations of the colors used.

Danger Label

White lettering on a black background except the word **DANGER** which is white with a red background.

Warning Label

White lettering on a black background except the word **WARNING** which is white with an orange background.

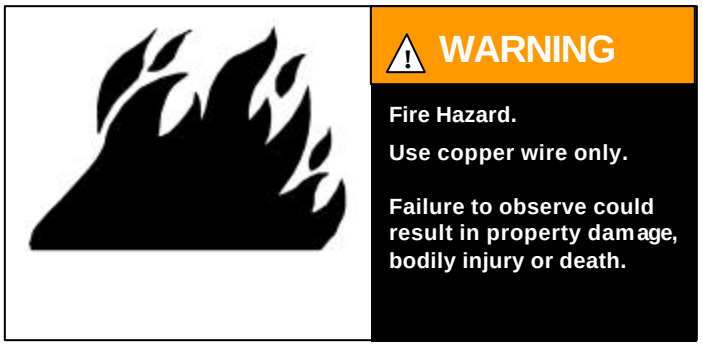

Caution Label

White lettering on a black background except the word **CAUTION** which is white with a yellow background.

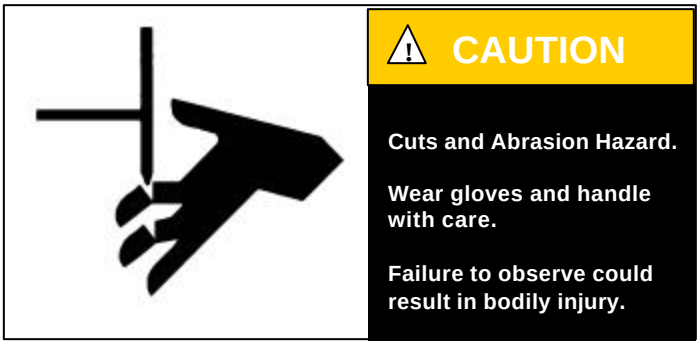

⚠ WARNING

This unit contains HFC -(R410A), an Azeotropic mixture of R-32 (Difluoromethane) and R-125 (Pentafluoroethane). DO NOT VENT HFC-(R410A) to the atmosphere. The U.S. Clean Air Act requires the recovery of any residual refrigerant. Do not use R-22 service equipment or components on R410A systems.

GENERAL DESCRIPTION

Model PCA and DCA.

These cooling only 100% outside-air units may be roof mounted on a factory supplied roof curb, slab mounted, or installed on post and rails. Air is drawn into the outside air intake located on the end of the unit and through metal mesh filters before entering the evaporator coil.

Every unit is charged with refrigerant and run tested before shipment.

Unpacking

When received, the unit should be checked for damage that might have occurred in transit. If damage is found, it should be noted on the carrier's Freight Bill. Request for inspection by carrier's agent should be made in writing at once.

Codes and Ordinances

Local authorities having jurisdiction should be consulted before installations are made to verify local codes and installation procedures.

All field wiring to the unit must be done in accordance with these instructions, the National Electric Code (ANSI/NFPA 70-1981) in the United States and all local codes and ordinances.

Installation should be done by a qualified agency in accordance with the instructions in this manual and in compliance with all codes and requirements of authorities having jurisdiction.

UNIT LOCATION

Unit Location

An intake louver protects the service end and clearance at this point should be maintained. A 36" clearance must be allowed for access to the compressor and electrical panel. A 24" clearance must be maintained for the air inlet to the condenser coil(s).

Do not locate the unit under an overhang that will short circuit hot air to the coil intakes.

When installed at ground level, the unit should be mounted on a level concrete slab which should extend at least 2" beyond the unit on all sides. The top of the slab should be 2" above the ground level. The depth of the slab below the ground level and its structural design is governed by the type of soil and climatic conditions. The slab must not be in contact with any part of the building wall or foundation. The space between the slab and building wall prevents the possibility of transmitting vibration to the building.

The dimensions of the slab or roof mount should be checked and verified before the equipment arrives. Unit supports, roof opening, roof curb flashing, drain requirements, and electric locations are important to a good installation.

When installing the equipment on top of a building, the following should be considered:

Structural members supporting the unit must be sufficiently strong for the weight of the unit and mounting rails.

Locate the unit as near as possible to the center of the area to be environmentally controlled. Sufficient clearance must be available for service, edge of roof, other units, or hazards.

The condenser air inlet and discharge air must be unobstructed by overhang, walls, or other equipment. Avoid locations next to exhaust fans or flues.

Select a location where external water drainage cannot collect around the unit.

Locate the unit so roof runoff water does not pour directly on the unit. Provide gutter or other shielding at roof level.

Where snowfall is anticipated, mount the unit above the maximum snow depth for the area.

INSTALLATION

The installation of packaged units consists of making final connections between the unit and building services such as electrical power supply, natural gas, supply and return duct connections, and drain connections.

The internal systems of the unit are completely factory installed and tested prior to shipment and no additional field labor is required.

Setting the Unit

UNIT LOCATION

CAUTION: Units may look identical but have significant internal differences. Check specific unit location carefully (referring to plans if necessary) prior to setting unit.

CURB INSTALLATION

Proper installation requires that the roof mounting curb be firmly and permanently attached to the roof structure. Check for adequate fastening method prior to setting rooftop unit on curb.

PROTRUSIONS

Inspect curb to insure that none of the utility services (electric, gas, drain lines) routed through the curb protrude above the curb. Duct connections will normally be made after unit is set on curb. If duct is prefabricated and installed within the curb prior to setting unit, insure that ductwork does not protrude above curb.

DO NOT ATTEMPT TO SET UNIT ON CURB IF PROTRUSIONS EXIST.

UNIT INSTALLATION

Lower unit carefully onto roof mounting curb or mounting rails or ground level slab. While rigging unit, center of gravity will cause condenser end to be lower than supply/return air end. Bring condenser end of unit into alignment with curb. With condenser end of unit resting on curb member and using curb as fulcrum, lower front end of unit until entire unit is seated on curb.

Rigging Removal

Remove spreader bars, lifting cables and other rigging equipment.

CAUTION: Do not allow crane hooks and spreader bars to rest on roof of unit.

Ductwork

Properly sized and installed ductwork is critical to reliable performance of the unit and system. Unit connection sizes are in the engineering specification manual. All ductwork must be installed according to local codes, practices and requirements.

Industry manuals should be used as a guide to sizing and designing the duct system.

Ducts passing through unconditioned spaces must be well insulated with vapor barrier to prevent condensation.

Condensate Piping

A condensate trap must be provided by customer. Drainage of condensate directly onto the roof is acceptable if permitted by local codes. It is recommended that a small drip pad of either stone, mortar, wood or metal be provided to prevent any possible damage to the roof. If condensate is to be piped into the building drainage system, the drain line must penetrate the roof external to the unit. Refer to local codes for additional requirements.

Dimensions of schedule 40 pipe (inches)

Size	Nominal diameter Outside	Inside	Wall thickness
3/4	1.050	0.824	0.113
1	1.315	1.049	0.133
1 1/4	1.660	1.380	0.140
1 1/2	1.900	1.610	0.145
2	2.375	2.067	0.154
2-1/2	2.875	2.467	0.203
3	3.500	3.068	0.216

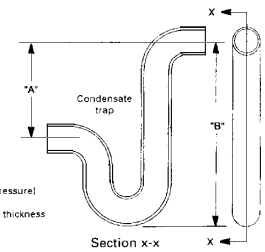

"A" = Pc (Condensate pan pressure)

"B" = (1.5 x Pc) + I.D. + wall thickness

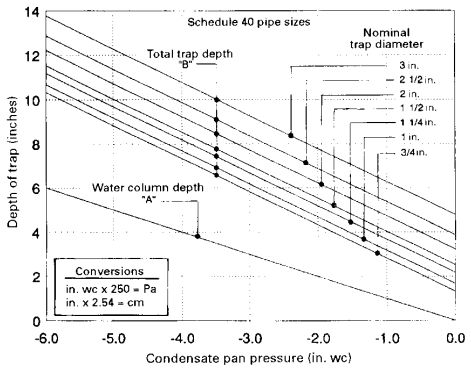

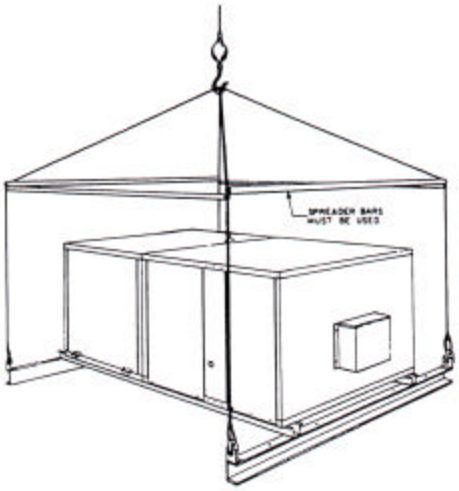

Electrical

Wiring Connections

Power wiring should be connected to the main power terminal block located within the unit main control section. Power wiring connections on units with factory disconnects should be made at the line side of the disconnect switch.

Low voltage wiring connections are made to the remote mounted controller or time clock.

DO NOT TAMPER WITH FACTORY WIRING

Contact your local representative or the factory if assistance is required. The internal power and control wiring of these units is factory installed and each unit is thoroughly tested prior to shipment.

Independent Power Source

It is recommended that an independent 115 volt power source be brought to the vicinity of the rooftop unit for portable lights and tools used by the service mechanic.

Main Power Wiring

The units are factory wired for the voltage shown on the nameplate.

Main power wiring should be sized for the minimum wire ampacity shown on the nameplate.

An external weather-tight disconnect switch properly sized for the unit total load is required for each unit. Disconnect must be installed in accordance with Local and/or National Electric Codes.

Power wiring may enter the Rooftop Unit through the side on all models, or through the unit base and roof curbs on models with the Power Through Curb option. Install conduit connectors at the entrance locations. External connectors must be weatherproof.

Grounding

All units must be properly grounded. The ground lug is provided for this purpose. **DO NOT** use the ground lug for connecting a neutral conductor. The unit must be electrically grounded in accordance with local codes, or in the absence of local codes, with the NEC ANSI/NFPA 70 1981.

INSTALLATION CONTINUED

Once it is established that supply voltage is within the utilization range; check and calculate if an unbalanced condition exists between phases. Calculate percent voltage unbalance as follows:

$$\text{Percent Voltage Unbalance} = 100 \times \frac{\text{Maximum Voltage Deviation From Average Voltage}}{\text{Average Voltage}}$$

FOR EXAMPLE - With voltage of 220, 215, and 210 (Measure L1-L2, L1-L3, L2-L3).

Average voltage = 645 3 = 215
Maximum voltage deviation from
Average voltage = 220 - 215 = 5

$$\text{Percent Voltage Unbalance} \quad \frac{100 \times 5}{215} = \frac{500}{215} = 2.3\%$$

Percent voltage unbalance must not exceed (2%) two percent.

Contact power company if phase unbalance exceeds 2%.

A means of disconnecting power from the unit must be placed adjacent to the unit in accordance with National Electrical Code or local codes. Aluminum power wire is not recommended.

LOW VOLTAGE CONTROL WIRING

Control System Wiring: For commercial equipment the following table lists the minimum size of 24 volt class 2 wire to be used.

Wire Size	Ft. Run From Unit to System Switch or Longest Run
18 A W G	Maximum Run 50 Feet
16 A W G	Maximum Run 75 Feet
14 A W G	Maximum Run 100/125 Feet
12 A W G	Maximum Run 150/200 Feet

Note: Wiring – Consult the wiring diagram furnished with the unit. These units are custom designed for each application.
The wiring diagrams in this publication are furnished only as a guide to the installing contractor. The unit wiring diagram is located inside the control panel of each unit.

SEQUENCES OF OPERATION

Temperature Controls: The Ambient Compressor Thermostat controls compressor on/off operation. The use of space or duct mounted sensors to control the compressor will produce unpredictable results. On systems with optional Hot Gas Reheat a discharge air thermostat is mounted in the air handler. A temperature/humidity sensor located in the conditioned space may be used in conjunction with the control for Hot Gas Reheat. A remote system switch such as a time clock or interlock may be used to energized the controls.

Mechanical Cooling

The evaporator blower starts when the system switch is closed. When the outdoor temperature rises above the set point of the adjustable outdoor thermostat, the compressor is active until the thermostat is satisfied. The leaving air temperature will be maintained by hot gas bypass and/or unloading the compressor. This is accomplished through suction-pressure sensing, thus tracking the outside air temperature variations.

When the outdoor temperature falls below the set point of the adjustable outdoor thermostat (normally 56°F), the compressor is deactivated.

Condenser Head Pressure Control

VARISPEED fan motor and control is standard with all reheat options because units operating in low ambient temperature require a control system to maintain stable head pressure. Head pressure control is accomplished with one or two variable speed condenser fan drives. A pressure sensing control modulates the condenser fan speed as required to maintain head pressure between 320 psig and 430 psig.

The Varispeed fan motor has been designed and tested to withstand the high temperatures incurred during variable speed operation **DO NOT SUBSTITUTE**.

Single fan models are equipped with one variable speed motor and control.

Dual fan models may be are equipped with one single phase variable speed motor and one 3 phase motor.

Four fan models may be equipped with one variable speed motor and three 3 phase motors.

This pressure sensing system consists of a variable speed motor driven fan and a constant speed motor driven fan. Both are controlled from refrigerant pressure rather than ambient temperature, reflecting actual operating conditions in the machine.

At low ambient, the variable speed fan operates, increasing in speed until maximum RPM is achieved at or around 45°F (±2) ambient. An adjustable pressure switch operates the constant speed three-phase fan set to energize the motor at 400 psig and de-energize at 295 psig. In the ambient temperature span of approximately 50°F to 53°F, the variable speed fan will ramp between maximum and minimum speed while the constant speed fan cycles. The start-stop cycle varies from 45 seconds to 22 minutes during this period.

At 53°F (±2), both fans are operating, the variable speed at minimum RPM and the constant speed at full RPM. As the ambient continues to rise, the variable speed motor increases to full speed and remains there.

Optional Hot Gas Reheat

Factory installed hot gas reheat circuit includes outlet regulator valve, check valves, hot gas solenoid operated control valve, variable speed condenser head pressure control, one stage sensor, and one row heat reclaim coil. The coil is equal to the evaporator face area and installed in the reheat position. *The sensor is factory mounted. Hot gas reheat may not be operated below 60°F. ambient temperature.*

Optional Reheat Plus

To lower relative humidity (RH) in the supply air stream, a one row subcooling coil, generally equal to the evaporator face area may be specified. The refrigerant liquid passes through the tube side, adding up to 40°F. of subcooling. For every two degrees of subcooling, the compressor capacity is increased one percent. This is also reflected as an increase in efficiency. The resulting heat is passed into the air stream as reheat, usually 8°F to 10° F. at 200 cfm/ton, thus the lower discharge air relative humidity.

Reheat Plus™ Subcooling Reheat System

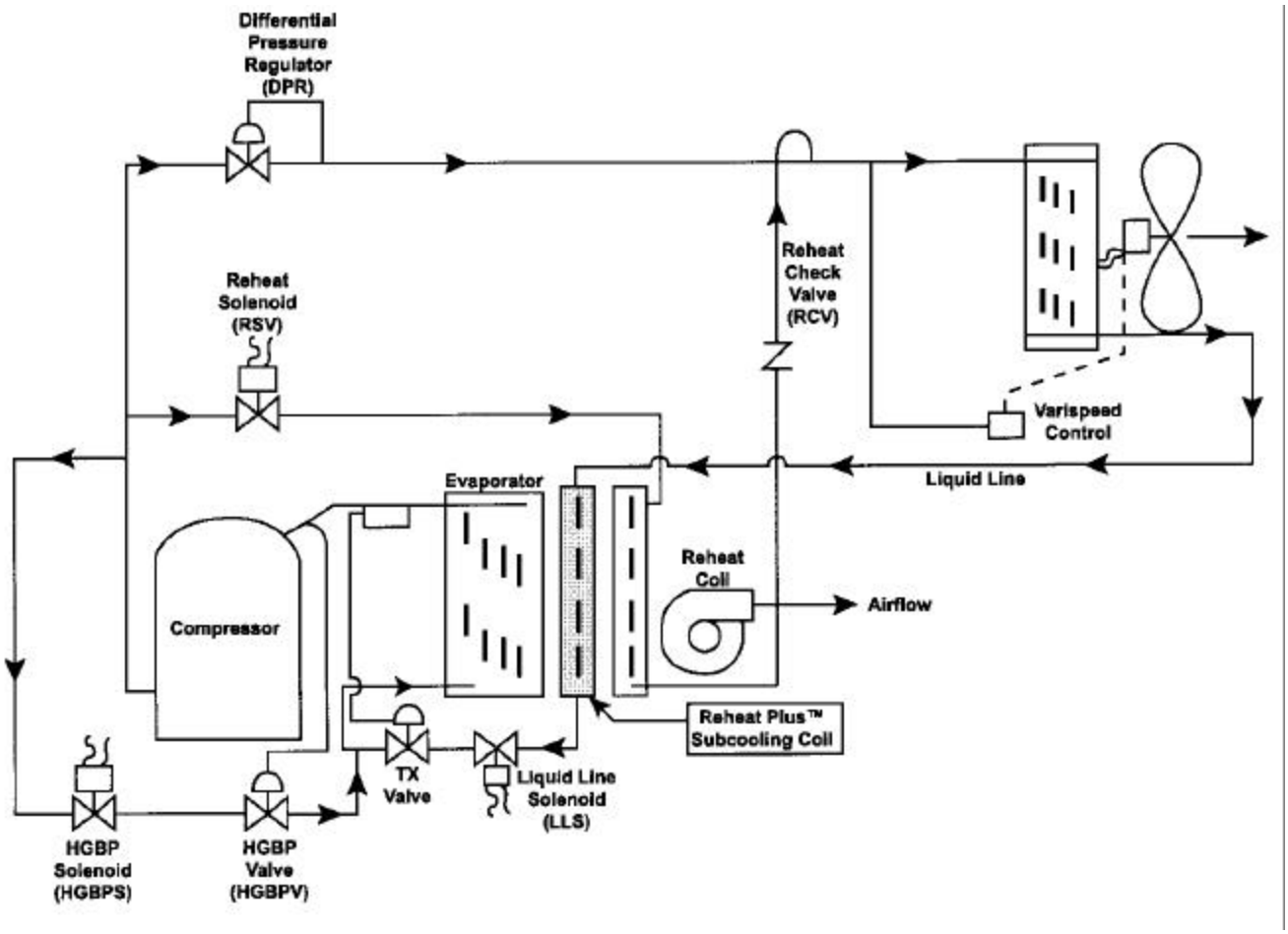

Application

Addison's patented Reheat Plus adds a subcooling coil to the Addison Hot Gas Reheat System. Its use is especially applicable to 100% Outdoor Air systems, or to recirculated air systems having high fresh air requirements of over 20-25%. The subcooling coil is active under all conditions of operation when the compressor is running, and typically provides 4°-6° of additional reheat at 350-400 CFM/Ton and 8°-12° of additional reheat at 200 CFM/Ton. The leaving air dew point will be lower then without the subcooling coil, and the total refrigeration capacity and efficiency (EER) will be higher

Typically, each two degrees of subcooling will result in increased evaporator capacity of ½%. Thus, a typical 35°-40° of subcooling will result in increased unit capacity of approximately 10%, with a corresponding EER increase of over 1.0 BTU/Watt.

The use of Reheat Plus™ often allows the designer to specify a smaller compressor to do a given job, or he can accept the added refrigeration capacity and drive the leaving dew point lower. In either case, Reheat Plus™ will give the optimum in leaving air conditions for a given unit size, and allow them to be controlled more precisely than ever before, at lowest operating cost.

See the following for controls and further description of Addison's Hot Gas Reheat System.

REHEAT SYSTEMS

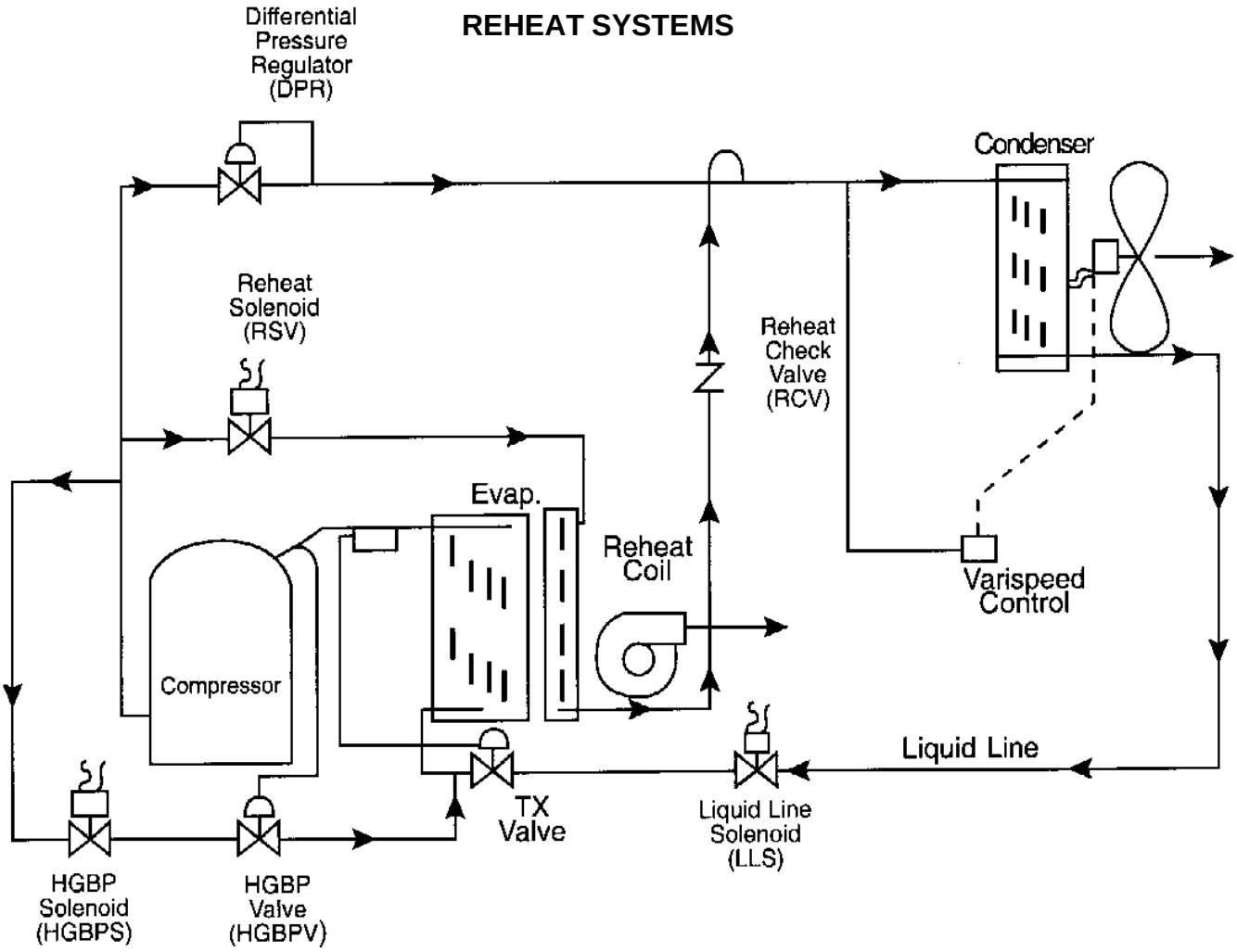

Application

Hot gas reheat is a method used to maintain a specific humidity level within the conditioned space. By installing a one row coil equal to the evaporator face area down stream of the evaporator the return air is cooled, dehumidified and then reheated. By reheating the supply air stream the relative humidity is reduced.

On 100% outside air applications the hot gas reheat will provide leaving air temperature control. If not otherwise specified (see Controls), control of the hot gas reheat is via a factory mounted leaving air thermostat. The unit employs continuous blower operation and the compressor operation is controlled by an ambient temperature thermostat.

Reheat Operation

The hot gas reheat option includes differential pressure regulator, check valve, hot gas solenoid operated valve, ***VARISPEED*** variable speed condenser head pressure control, single stage thermostat (factory mounted) and a one row heat reclaim coil.

The adjustable differential pressure regulator is factory set based on the reheat coil capacity and may require further field adjustment after testing.

The ***VARISPEED*** head pressure control permits stable refrigeration pressures over a wide range of evaporator and ambient temperatures.

Refrigerant Flow

The ***VARISPEED*** Fan Control System basically controls the compressor discharge pressure. The speed control module responds to discharge pressure; it speeds the condenser fan up as pressure rises and slows the fan down as pressure falls due to load conditions or as outdoor ambient temperature falls.

The Differential Pressure Regulator (DPR) is used to maintain a constant differential of approximately 10 psig across the reheat coil to assure the desired hot gas flow through the coil. The DPR is field adjustable to allow more or less gas to flow through the coil, giving a higher or lower reheat temperature rise.

The Reheat Solenoid Valve (RSV) is installed ahead of the reheat coil, and opens when reheat is required (see Controls Section below). The Reheat Check Valve (RCV) acts to prevent any back flow of hot gas into the reheat coil when the RSV is closed.

The Hot Gas Bypass Valve (HGBPV) is not directly associated with the reheat circuit, but serves to limit the evaporator pressure. By introducing hot discharge gas into the cold expanding refrigerant entering the evaporator, a false load is imposed, thus keeping the compressor suction pressure from falling to dangerously low levels, and preventing coil freeze-up. The HGBPV is field adjustable to satisfy a broad range of application conditions.

The Hot Gas Bypass Solenoid (HGBPS) opens whenever the compressor starts, and closes when it stops. The Liquid Line Solenoid (LLS) opens when the unit starts. If the system has a pumpdown circuit (larger units, reciprocating compressors), when there is no longer a call for cooling, the LLS closes, the unit pumps down, and the compressor is shut down by the low pressure control. On a call for cooling the LLS opens, and rising evaporator pressure allows the low pressure control to start the compressor.

If the unit does not include a pump down circuit, the LLS & HGBPS serve as antimigration valves to keep refrigerant from collecting in the evaporator and the compressor crankcase during the off cycle.

Controls

There are many ways to control hot gas reheat. You should choose the means that best fits your specific application:

Thermostat – Terminals may be furnished in the control panel of outside air units to allow control of the reheat from the conditioned space. The factory mounted leaving air thermostat will serve as a high limit control to prevent adding heat into the space

Humidistat – Terminals may be furnished in the control panel to switch the compressor and the reheat coil on or off providing optimal humidity control. On outside air units the humidistat will control the reheat coil only.

DDC – Terminals may be furnished, or the factory may wire Direct Digital Controls to control the unit depending upon the algorithm of the control.

If additional space temperature control is required, additional circuits (up to four) may be controlled by an electronic reset or DDC controller with both room and duct sensor input. On a drop in space temperature, the controller would energize or de-energize the hot gas solenoid(s) in sequence to raise or lower the leaving air temperature.

Operating Pressures

The operating pressures of the system may vary somewhat from conventional operating characteristics. Please refer to the Cooling Performance table on page 17 for approximate operating pressures.

SEQUENCES OF OPERATION CONTINUED

Hot Gas Bypass

Hot gas bypass is a means of capacity control during lower ambient temperature conditions.

The Hot Gas Bypass valve is an adjustable valve and should be set to open when the refrigerant suction pressure drops to 107 – 112 psig. It varies unit capacity by introducing discharge refrigerant into the evaporator circuit where it creates a false evaporator load. The hot gas is cooled prior to its return to the compressor as it passes through the evaporator.

The Hot Gas Bypass Solenoid Valve is energized through the thermostat and routs discharge gas to the hot gas bypass valve. It is deenergized during the pump down cycle.

Optional Motorized Outside Air Damper

Motorized dampers are energized to open when the compressor or compressors are operating.

Optional Clogged Filter Indicator

Dirty or clogged filters are red flagged by an indicator when the preset pressure differential across the filters is reached. The indicator is factory installed and manual-reset. It includes contacts for remote annunciation.

SureTrip™ Phase Monitor

Provides line voltage monitoring and momentary power failure (brown out) protection. At power interruption, thermostat control voltage is interrupted. This device is auto-reset with 5 minute time delay when line power is restored. This devise also provides phase reversal protection; therefore if it is replaced, motor rotation should be verified.

START-UP PROCEDURES

WARNING

Electrical shock, fire and/or explosion hazard.

Use extreme care during all of the following checks and procedures.

Make sure Electric Power is turned OFF as instructed in appropriate steps.

Failure to follow this warning can result in property damage, personal injury, and/or death.

Check the unit's operation as outlined in the following instructions.

Blower and Phasing Check

1. Shut electric power **OFF** at unit disconnect.
2. Check to see that clean, properly sized air filters are installed.
3. Check to see that everything inside the unit is clear and ready to operate safely. Ensure that there are no objects in, on or around the motor, belt or blower wheel.
4. Set thermostat Heat-Cool selector (or time clock/ interlock switch) to **OFF**.
5. Set thermostat fan switch to **AUTO**.
6. Turn electric power **ON**. Nothing should start running. If any unusual arcing, odors or noises are encountered, shut electric power **OFF** immediately and check for wiring errors.

NOTE: The circulation blower motor and compressor(s) are three phase and are factory synchronized for proper rotation. *Even if the circulation blower motor comes on and air seems to be circulating, it is possible that the blower motor rotation is incorrect due to improper phasing.* The scroll compressor(s) (if equipped) will run backwards under this condition and be damaged. It is therefore necessary to check for proper rotation.

CAUTION

Do **NOT** operate the unit with the compressor(s) running until proper blower rotation has been confirmed by running the following test.

7. Set system **ON**. The circulating air blower should come **ON**.
8. Shut electric power **OFF** at unit disconnect and visually observe the direction of the blower rotation as it slows down. Do **NOT** put hands or any other object in, on or around the belt, motor or blower wheel. If blower wheel rotation is the same as the directional arrow on the blower housing, proceed to the next step.

WARNING

Moving parts hazard.

Do NOT put hands or any other object in, on or around the motor, belt or blower wheel. Ensure that there are no objects in, on or around the motor, belt or blower wheel before turning electric power on.

Failure to follow this warning can result in property damage, personal injury, and/or death.

START-UP PROCEDURES CONTINUED

CAUTION

If blower rotation is incorrect, shut electric power OFF at unit disconnect and reverse any two supply wires at field connections ONLY. Do NOT reverse the blower and/or compressor leads or rewire any internal wiring. After rewiring is done, repeat blower rotation check to ensure that blower rotation is now correct.

9. Turn electric power **ON** at unit disconnect.

Cooling Checks

The compressors have a five minute anti-cycle delay that is activated whenever the compressors turn off. For instance, if the unit is manually shut off when the compressors are running and the unit is turned back on two minutes later, it will be an additional three minutes before the compressors will restart.

CAUTION

Do NOT operate the unit with the compressor(s) running until proper blower rotation has been confirmed during the Blower and Phasing Check in the previous section. If the phasing is incorrect, the scroll compressor(s) (if equipped) will run backwards and they will be damaged.

PREPARING EQUIPMENT FOR OPERATION

PRE-START CHECKLIST

Is the unit properly located and level with proper clearance?

Is the ductwork correctly installed?

Is the condensate line properly sized, run, trapped, pitched and primed?

Is the air filter of the correct size and number, clean and in place?

Is the wiring properly sized and connected according to the unit wiring diagram?

Are all wiring connections tight including those in the unit and compressor electrical boxes?

Has the unit been properly grounded and fused with the recommended fuse size? See wiring data.

Has the unit been leak tested?

Do the condenser fans and indoor blower turn free without rubbing and are they tight on the shafts?

Have all of the setscrews been tightened on the blower motor and fan?

Has the belt tension in the blower been checked and pulley aligned?

Has all work been done in accordance with applicable local and national codes?

Are all covers and access panels in place to prevent air loss and safety hazards?

Has the voltage been checked?

Has the crankcase heater been energized for 8 hours? Be sure the system switch is “OFF”.

START-UP AND REQUIRED FIELD ADJUSTMENTS

Do not attempt to start-up system below 50°F. ambient temperature.

Be sure the crankcase heater has been energized for a minimum of 8 hours.

Break the vacuum with liquid R10A. Add to the liquid line at the condenser until pressures are equalized.

Turn system switch on and operate unit. Now add refrigerant vapor in the suction side until the liquid sight glass is clear of bubbles. It is recommended the system be charged initially by clearing the sightglass. Do not overcharge, verify subcooling.

On systems with optional hot gas reheat it may be necessary to adjust the reheat thermostat to 50 degrees F. This setting will de-energize the reheat circuit. If not disconnect the reheat thermostat.

The hot gas bypass valve should be energized and this should be the maximum charge required for these units. Units with reheat will require additional charge for the reheat circuit.

Adjusting the hot gas bypass valve. This bypass valve Must be field adjusted. The valve must open at 112 PSIG. It may be necessary to simulate a light load if the outdoor temperature is above 70-75 degrees F. Reduce the evaporator load (lower entering airflow) until the suction pressure lowers to the point at which bypass is desired (112 PSIG). If the hot gas bypass was de-energized to stop hot gas flow, make sure it is now energized. Turn the power assembly adjusting stem on top of the regulator in a clockwise direction until bypass occurs (you will hear the gas flowing or feel the hot gas line, it will be warm when the unit starts to bypass).

Check or ensure suction pressure does not fall below the predetermined set point (102 PSIG). A clockwise turn of the adjusting stem will increase the pressure setting; a counterclockwise turn will decrease it. Adjustments should be made in small increments, allowing the system to stabilize after each turn. Vary the evaporator load to test at various conditions to ensure the suction pressure does not drop below the predetermined setpoint. Replace the seal cap on the adjusting stem.

Check the airflow by checking the external static pressure. Verify the airflow is within the ratings. Check blower motor amperage. Make adjustments as needed to ensure airflow is correct and to specifications. On units without hot gas reheat, the low ambient head pressure control should be factory set to cut-in at 450 PSIG and cutout at 400 PSIG. Check calibration of this control. If trim adjustment is required maintain a wide differential.

On systems with optional hot gas reheat, check the reheat control valve. This valve is factory set at a differential of 8-10 PSIG. This should be adequate for most applications. However, if additional reheat capacity is required, increase the differential pressure to a higher value. To do this, attach discharge pressure gauges to the Schrader connections upstream and downstream of the valve. Remove the cap fom the top of the valve and turn the stem clockwise to increase the pressure differential and counterclockwise to decrease the differential. Verify the operation of the reheat system by turning the reheat thermostat to a temperature 5-10 degrees F. above the leaving air temperature. The reheat solenoid will be energized and will cycle as the temperature changes. Set the reheat thermostat at the desired leaving air temperature. Adjustment should also include a calibration check of the head pressure control for the other fan motor(s) .The recommended settings are to cut in at 350 PSIG and cutout at 400 PSIG. Disregard these steps if the unit is not equipped with hot gas reheat. These units utilize an electronic variable speed head pressure control for one condenser fan motor. It is factory set to maintain a minimum head pressure of 330 PSIG. For more information on the reheat control valve, See Supplemental Instructions for Hot Gas Reheat. Readjust the reheat thermostat to 65-70 degrees F. The hot gas reheat circuit should be energized. Again clear the sight glass. This would be the maximum charge required for this system. The final adjustment of the refrigerant charge should be by subcooling. The recommended subcooling at the condensing unit should be around 15 degrees at 75 degrees F. and as low as 5 degrees at 105 degrees F. Verify proper operation of the thermostatic expansion valve by checking the superheat. The superheat should be 18-20 degrees at the suction line in the condensing section.

SERVICE

MAINTENANCE

Filters must be checked at least once each month on commercial operations. It is not recommended that filters be allowed to load entirely with dirt before replacement since this practice will permit excess dirt to foul the cooling coil and introduce service problems by reducing air flow. Provisions have been made for ease in changing these items.

Belts and Pulleys should be checked whenever filters are changed. Make sure belts and setscrews are set tight. Check for wear, cracking, alignment, tension and motor amperage.

Condensate Drains should always be checked whenever filters are changed to ensure the condensate is draining properly.

Condensate Drain Pan should be cleaned and flushed every six months.

Bearings require no maintenance since sealed ball bearings are used in the blower motor and condenser fan motors. Lubrication is thus provided for the life of the bearing.

Finishing of the sheet metal parts are done by painting in an Electrodeposition paint system for a dipped and baked enamel finish. Appearance can be restored with automotive wax.

Thermoguard Protection Units furnished with the Thermoguard protection option or other corrosion protection coating it is imperative to clean and inspect the cabinet, coils and components on a semiannual basis. Use a chemical cleaning agent to neutralize the contaminant. Then rinse thoroughly. Fresh water rinsing alone does not constitute cleaning.

Controls require no routine maintenance. The points on the compressor contactors will become discolored through usage, but it will not effect system operation, Do not dress or file contact points. Should a surge of power or unusual condition damage points, replace them with identical items from the manufacturer.

PARTS SECURITY CHECK

Before leaving an installation or operating the unit, determine whether any loose parts should be tightened. Failure to do this may lead to noisy operation.

Check all setscrews on blowers and fan blades.

Adjust and tighten all thrust collars.

Adjust all belts and check drives.

Retighten all electric connections.

The Standard base pan of all Addison Products roof mounted packaged heating and cooling products is equipped with a series of “weep” holes on the bottom edges.

These ¾” threaded fittings are provided to allow natural drainage of any rain water that has entered the unit in the event service panels are incorrectly or incompletely installed or damaged has occurred to the unit’s roof.

These “weep” holes are also a convenient means of evacuating water used to wash the interior of the unit or evaporator and reheat coils.

The threaded fittings accommodate drain piping or maintenance hoses used to conduct water from the inside of the unit to a safe disposal.

The “weep” holes are not condensate drains, and need not be trapped. They may be plugged or left open for automatic drainage.

SERVICE CONTINUED

PROCEDURE FOR COMPRESSOR REPLACEMENT

Isolate the compressor and remove the refrigerant from system.

Remove the inoperative compressor.

Install a properly sized suction line filter-drier in the compressor suction line and replace liquid line drier.

Examine expansion valves and solenoid valves to see if cleaning or replacement is required.

Install the replacement compressor.

Evacuate the compressor and system to 500 microns.

Open the compressor service valves and charge the system with R410A after compressor evacuation.

Operate the system. Check the pressure drop across the suction and liquid drier after the first 1½ hours of operation. Pressure drop across a liquid line drier should not exceed 5 PSI and the suction line filter-drier should not exceed 3 PSI.

After 8 to 24 hours, take an oil sample and test with an acid test kit. If the oil dirty or acidic, change the suction line and liquid line filter drier and recheck after 8 hours of compressor operation.

After two weeks, recheck oil acidity to see if another change of suction line and liquid line filter-drier is necessary.

In some cases non-condensable gases are produced during the burnout. Compare the equalized head pressure with the pressure (equivalent) to the outdoor temperature. If the pressures are different, then the system should be purged.

System cleaning after compressor mechanical failures: Mechanical compressor failures such as oil pump, valve plates, etc. may not necessarily contaminate the system. Check oil of defective compressor by means of an oil acid kit and check compressor for shorts, grounds and continuity- if all checks negative, then it is only necessary to evacuate replacement or repaired compressor and install a new liquid line drier. Make an acid test after 8 hours of operation.

ORDERING PARTS

When reporting shortages or damaged parts, give the complete unit model and serial number which is stamped on the unit rating plate. These units are made special to order and the following parts list should only be used as a guide. Do not order parts from these lists.

Cooling Performance Data at 200 CFM Per Ton

Condenser Inlet Air Dry Bulb°F	Evaporator Inlet Air °F		Evaporator Inlet-Outlet Air Temp Differential, DB°F		High Side Pressure psig	
	Dry Bulb	Wet Bulb	Min.	Max.	Min.	Max.
105	105	87	58	33	510	556
		82	33	38	500	550
95	95	80	37	32	445	490
		75	32	37	440	485
85	85	72	26	31	375	420
		67	31	36	365	415
75	75	65*	22	27	350	400
		60*	26	31	345	390

*Condenser fan at part load RPM, unit at partload operation

TYPICAL 208/230-1-60 WIRING DIAGRAM

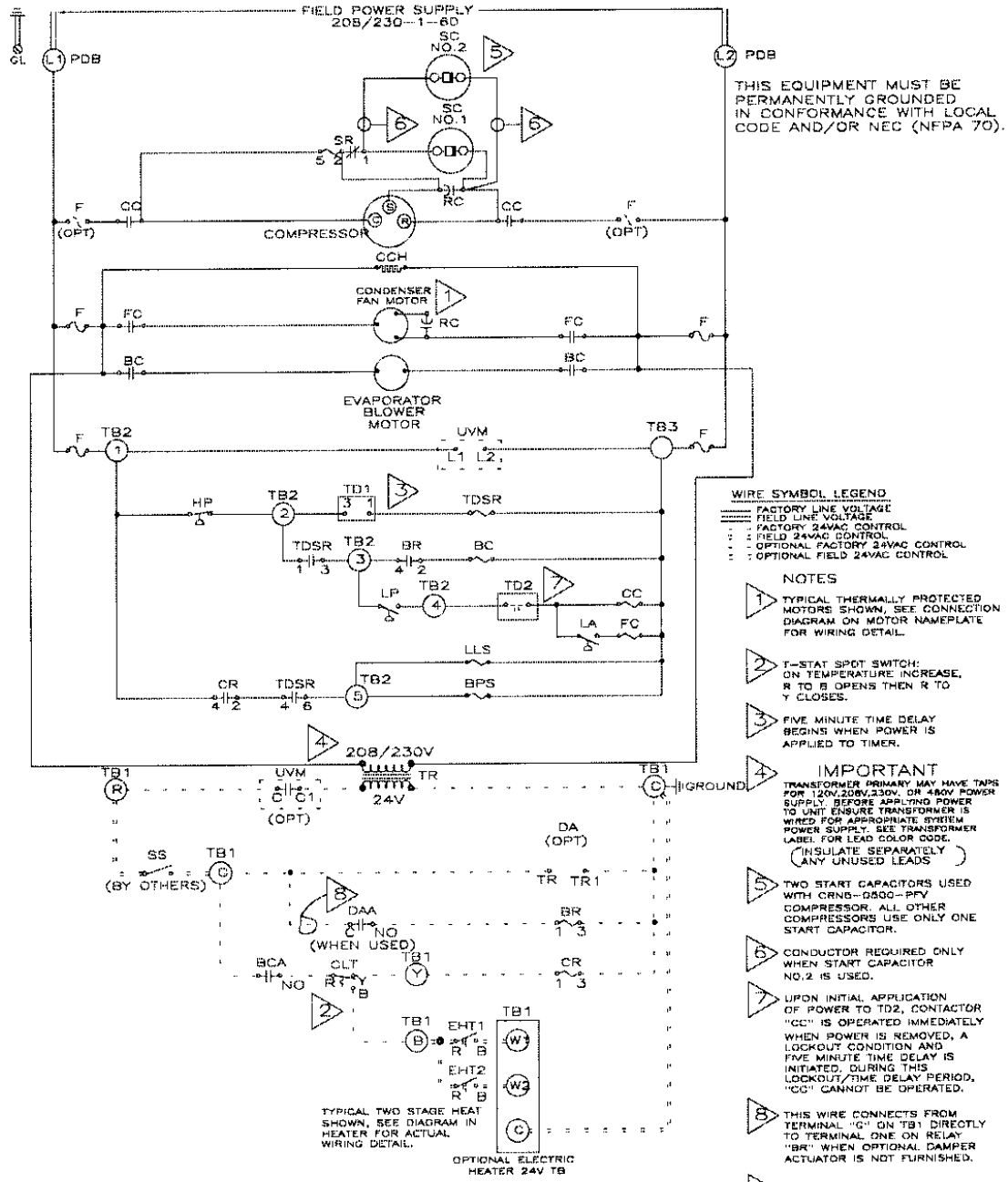

WIRE SYMBOL LEGEND

- FACTORY LINE VOLTAGE
- FIELD LINE VOLTAGE
- FACTORY 24VAC CONTROL
- FIELD 24VAC CONTROL
- OPTIONAL FACTORY 24VAC CONTROL
- OPTIONAL FIELD 24VAC CONTROL

NOTES

1. TYPICAL THERMALLY PROTECTED MOTORS SHOWN, SEE CONNECTION DIAGRAM ON MOTOR NAMEPLATE FOR WIRING DETAIL.
2. T-STAT SPDT SWITCH: ON TEMPERATURE INCREASE, R TO B OPENS THEN R TO Y CLOSES.
3. FIVE MINUTE TIME DELAY BEGINS WHEN POWER IS APPLIED TO TIMER.
4. IMPORTANT
   TRANSFORMER PRIMARY MAY HAVE TAPS FOR 120V,208V,230V, OR 480V POWER SUPPLY. BEFORE APPLYING POWER TO UNIT ENSURE TRANSFORMER IS WIRED FOR APPROPRIATE SYSTEM POWER SUPPLY. SEE TRANSFORMER LABEL FOR LEAD COLOR CODE.
   (INSULATE SEPARATELY ANY UNUSED LEADS)
5. TWO START CAPACITORS USED WITH CRNB-0500-PFV COMPRESSOR. ALL OTHER COMPRESSORS USE ONLY ONE START CAPACITOR.
6. CONDUCTOR REQUIRED ONLY WHEN START CAPACITOR NO.2 IS USED.
7. UPON INITIAL APPLICATION OF POWER TO TD2, CONTACTOR "CC" IS OPERATED IMMEDIATELY WHEN POWER IS REMOVED, A LOCKOUT CONDITION AND FIVE MINUTE TIME DELAY IS INITIATED. DURING THIS LOCKOUT/TIME DELAY PERIOD, "CC" CANNOT BE OPERATED.
8. THIS WIRE CONNECTS FROM TERMINAL "G" ON TB1 DIRECTLY TO TERMINAL ONE ON RELAY "BR" WHEN OPTIONAL DAMPER ACTUATOR IS NOT FURNISHED.
9. THIS WIRE CONNECTS DIRECTLY TO TERMINAL "R" ON TB1 WHEN OPTIONAL UNDERVOLTAGE MONITOR NOT USED.

ABBREVIATION LEGEND

BC :EVAPORATOR BLOWER MOTOR CONTACTOR
BCA :BLOWER MOTOR CONTACTOR-AUXILIARY CONTACT
BPS :HOT GAS BYPASS VALVE SOLENOID
BR :BLOWER PILOT RELAY
CC :COMPRESSOR CONTACTOR
CCH :COMPRESSOR CRANKCASE HEATER
CLT :COMPRESSOR LOCKOUT T-STAT (CHANGE OVER)
CR :COOLING PILOT RELAY
DA :DAMPER ACTUATOR
DAA :DAMPER ACTUATOR AUXILIARY SWITCH
EHT :ELECTRIC HEAT T-STAT (TYPICAL)
F :FUSE
FC :CONDENSER FAN MOTOR CONTACTOR
GL :EQUIPMENT GROUNDING LUG
HP :HIGH REFRIGERANT PRESSURE CUTOUT
LA :LOW AMBIENT CONTROL
LLS :LIQUID LINE VALVE SOLENOID
LP :LOW REFRIG. PRESSURE CONTROL
NC :NORMALLY CLOSED
NO :NORMALLY OPEN
OPT :OPTIONAL
PDB :POWER DISTRIBUTION BLOCK
RC :MOTOR RUN CAPACITOR
SC :START CAPACITOR
SPDT:SINGLE POLE DOUBLE THROW
SR :START (POTENTIAL) RELAY
SS :SYSTEM SWITCH
TB :TERMINAL BOARD
TD :SOLID STATE TIME DELAY
TDSR:TIME DELAY SLAVE RELAY

SYMBOLS:

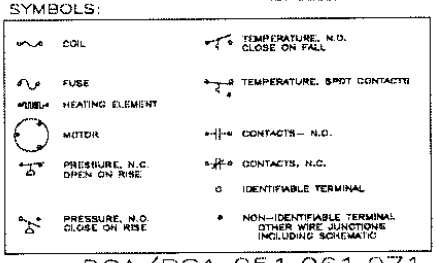

DCA/PCA 051,061,071
208/230-1-60

TYPICAL 208/230-3-60 WIRING DIAGRAM

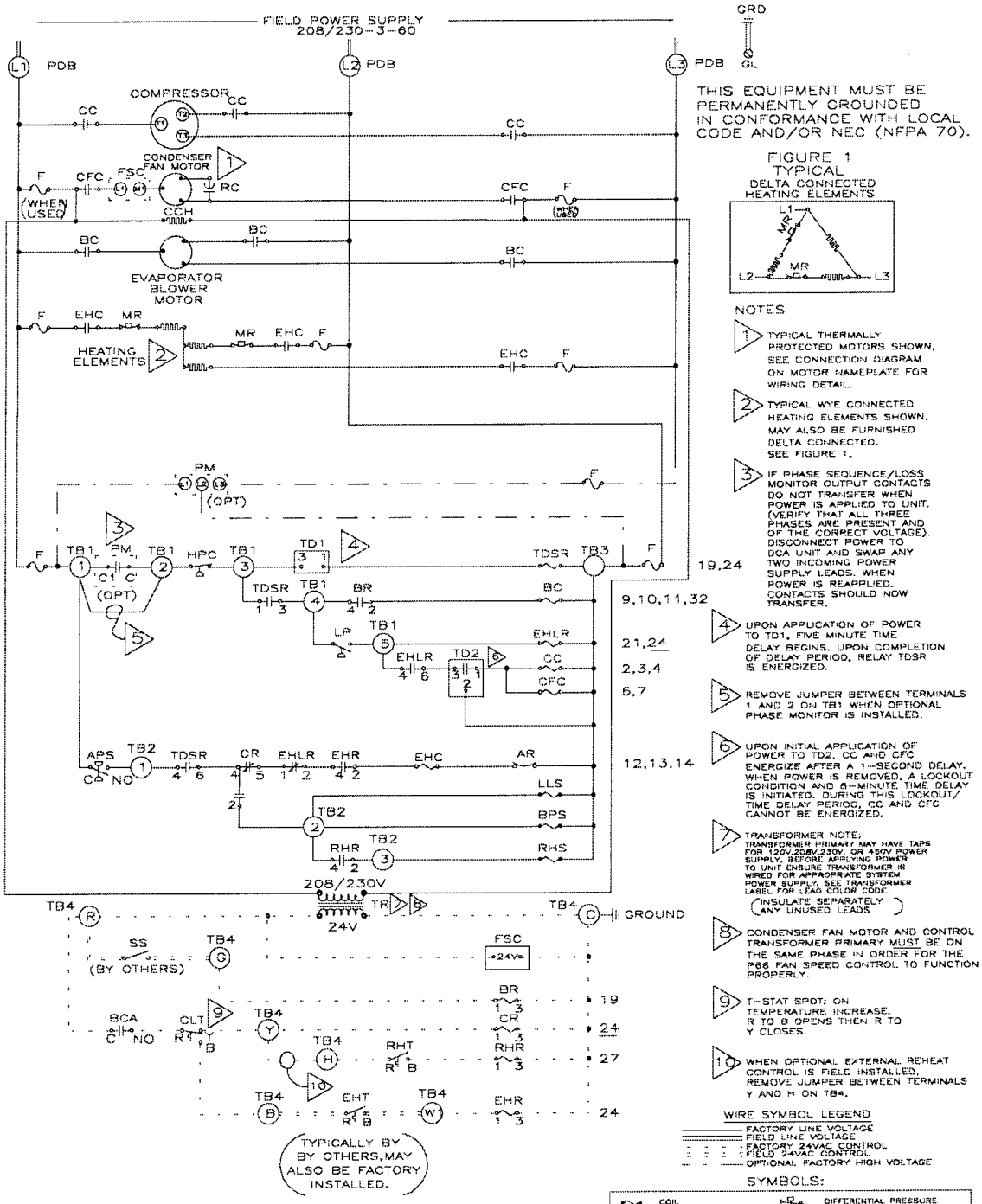

FIGURE 1
TYPICAL
DELTA CONNECTED HEATING ELEMENTS

NOTES

1. TYPICAL THERMALLY PROTECTED MOTORS SHOWN. SEE CONNECTION DIAGRAM ON MOTOR NAMEPLATE FOR WIRING DETAIL.
2. TYPICAL WYE CONNECTED HEATING ELEMENTS SHOWN. MAY ALSO BE FURNISHED DELTA CONNECTED. SEE FIGURE 1.
3. IF PHASE SEQUENCE/LOSS MONITOR OUTPUT CONTACTS DO NOT TRANSFER WHEN POWER IS APPLIED TO UNIT. (VERIFY THAT ALL THREE PHASES ARE PRESENT AND OF THE CORRECT VOLTAGE). DISCONNECT POWER TO DCA UNIT AND SWAP ANY TWO INCOMING POWER SUPPLY LEADS. WHEN POWER IS REAPPLIED. CONTACTS SHOULD NOW TRANSFER.
4. UPON APPLICATION OF POWER TO TD1, FIVE MINUTE TIME DELAY BEGINS. UPON COMPLETION OF DELAY PERIOD, RELAY TDSR IS ENERGIZED.
5. REMOVE JUMPER BETWEEN TERMINALS 1 AND 2 ON TB1 WHEN OPTIONAL PHASE MONITOR IS INSTALLED.
6. UPON INITIAL APPLICATION OF POWER TO TD2, CC AND CFC ENERGIZE AFTER A 1-SECOND DELAY. WHEN POWER IS REMOVED, A LOCKOUT CONDITION AND 6-MINUTE TIME DELAY IS INITIATED. DURING THIS LOCKOUT/TIME DELAY PERIOD, CC AND CFC CANNOT BE ENERGIZED.
7. TRANSFORMER NOTE: TRANSFORMER PRIMARY MAY HAVE TAPS FOR 120V,208V,230V, OR 460V POWER SUPPLY. BEFORE APPLYING POWER TO UNIT ENSURE TRANSFORMER IS WIRED FOR APPROPRIATE SYSTEM POWER SUPPLY. SEE TRANSFORMER LABEL FOR LEAD COLOR CODE. (INSULATE SEPARATELY ANY UNUSED LEADS)
8. CONDENSER FAN MOTOR AND CONTROL TRANSFORMER PRIMARY MUST BE ON THE SAME PHASE IN ORDER FOR THE P66 FAN SPEED CONTROL TO FUNCTION PROPERLY.
9. T-STAT SPDT: ON TEMPERATURE INCREASE, R TO B OPENS THEN R TO Y CLOSES.
10. WHEN OPTIONAL EXTERNAL REHEAT CONTROL IS FIELD INSTALLED, REMOVE JUMPER BETWEEN TERMINALS Y AND H ON TB4.

WIRE SYMBOL LEGEND

- FACTORY LINE VOLTAGE
- FIELD LINE VOLTAGE
- FACTORY 24VAC CONTROL
- FIELD 24VAC CONTROL
- OPTIONAL FACTORY HIGH VOLTAGE

SYMBOLS:

COIL	DIFFERENTIAL PRESSURE
	TEMPERATURE, SPDT
FUSE	BIMETAL DISC THERMAL CUTOUT-AUTO RESET
HEATING ELEMENT	BIMETAL DISC THERMAL CUTOUT-MANUAL RESET
MOTOR	CONTACTS- N.O.
PRESSURE, N.C. OPEN ON RISE	CONTACTS, N.C.
	IDENTIFIABLE TERMINAL
PRESSURE, N.O. CLOSE ON RISE	NON-IDENTIFIABLE TERMINAL OTHER WIRE JUNCTIONS INCLUDING SCHEMATIC

ABBREVIATION LEGEND

APS :AIR FLOW PROVING SWITCH	FSC :FAN MOTOR SPEED CONTROL (P66)
AR :AUTO RESET HIGH LIMIT	GL :EQUIPMENT GROUNDING LUG
BC :EVAPORATOR BLOWER MOTOR CONTACTOR	HPC :HIGH REFRIGERANT PRESSURE CUTOUT
BCA :BLOWER MOTOR CONTACTOR-AUXILIARY	LLS :LIQUID LINE SOLENOID VALVE
BPS :HOT GAS BYPASS SOLENOID VALVE	LP :LOW REFRIGERANT PRESSURE CONTROL
BR :BLOWER PILOT RELAY	MR :MANUAL RESET HIGH LIMIT
CC :COMPRESSOR CONTACTOR	PDB :POWER DISTRIBUTION BLOCK
CCH :COMPRESSOR CRANKCASE HEATER	PM :PHASE SEQUENCE/LOSS MONITOR
CFC :CONDENSER FAN MOTOR CONTACTOR	RC :MOTOR RUN CAPACITOR
CLT :COMPRESSOR LOCKOUT T-STAT (CHANGE OVER)	RHR :REHEAT RELAY
CR :COOLING RELAY	RHS :HOT GAS REHEAT SOLENOID VALVE
DA :DAMPER ACTUATOR	RHT :HOT GAS REHEAT T-STAT

DCA 051,061,071,101,141
208/230-3-60

TYPICAL 460-3-60 WIRING DIAGRAM

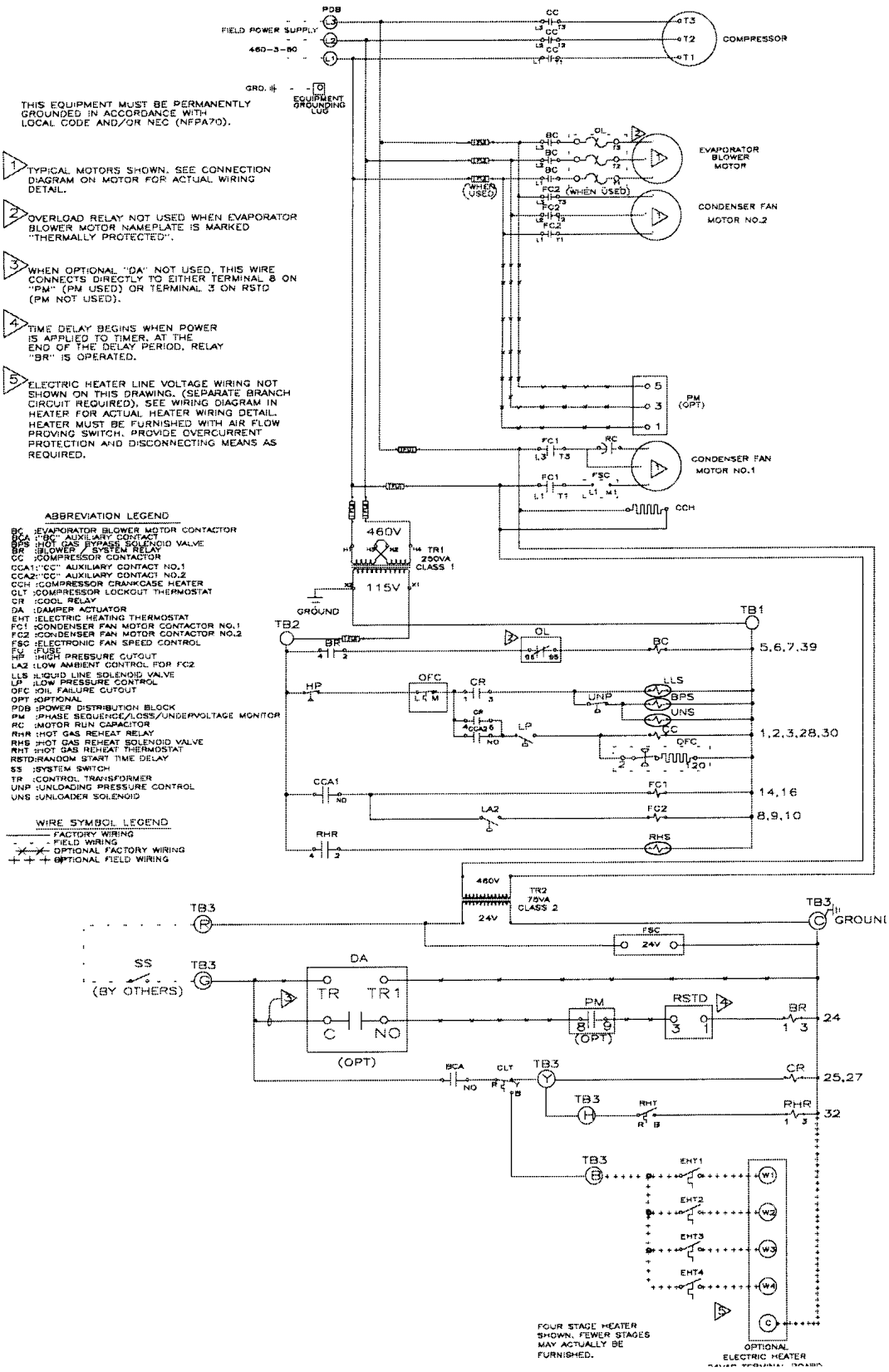

TYPICAL 380/415-3-50 WIRING DIAGRAM

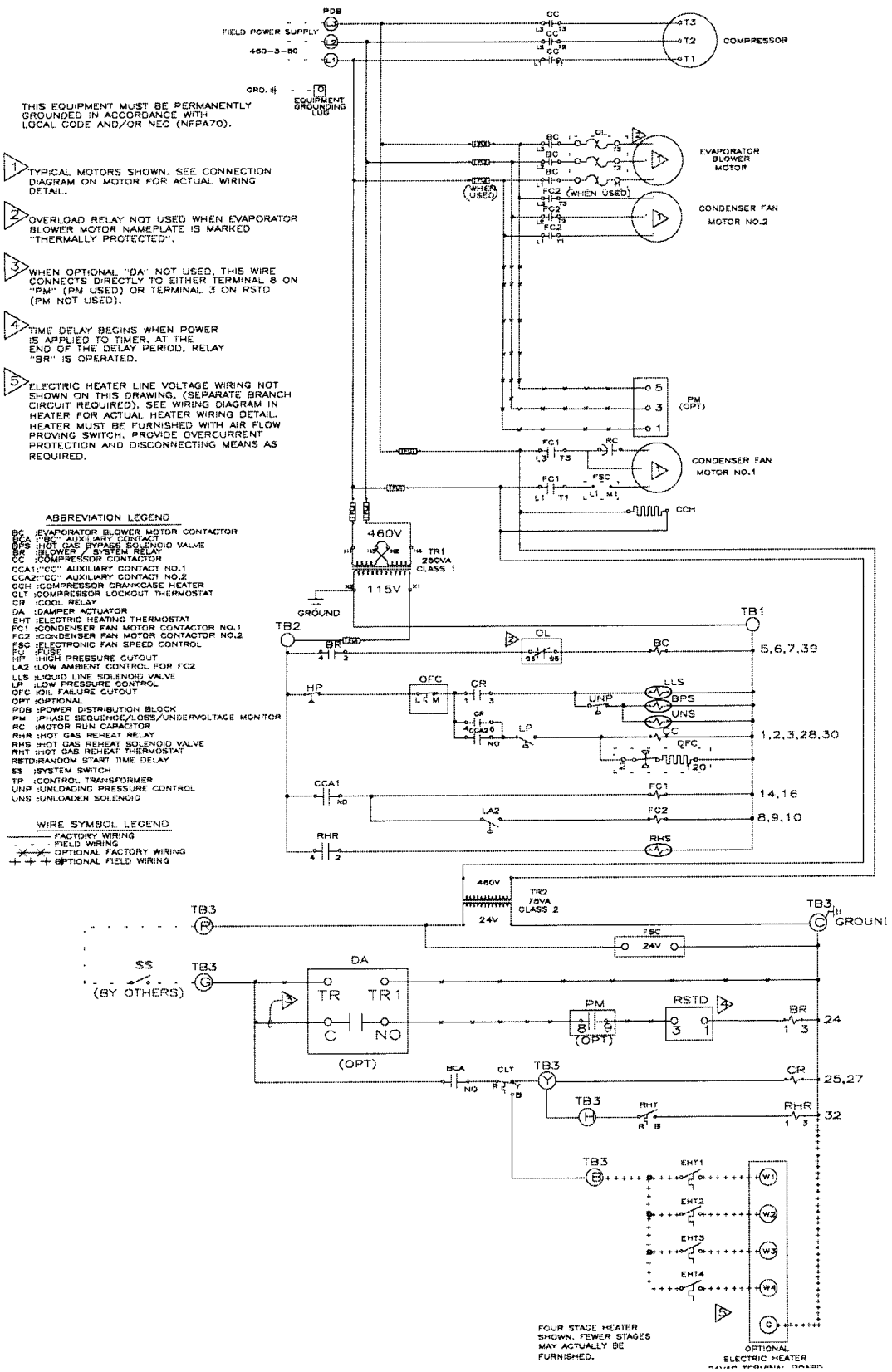

ADJUSTABLE BELT DRIVE BLOWER

Personal injury hazard.

Use extreme care during the following procedures and obey Safety Information.

Failure to do so may result In personal Injury.

The following safety rules MUST always be followed when working near belt drive.

Always Turn the Power Off

1. Turn the power to the unit OFF before you begin working on it.

Always Wear Protective Clothing

2. **NEVER** wear loose or bulky clothes, such as neckties, exposed shirttails, loose sleeves, or lab coats around belt drives. Wear gloves while inspecting sheaves to avoid nicks, burrs, or sharply worn pulley edges.

   The blower speed is changed by adjusting the variable speed pulley mounted on the blower motor.

   If the blower speed needed is different than the speed of the blower as shipped, follow the steps below to change the blower speed. Before changing the blower speed, read the above safety rules first.

3. Turn electric power **OFF**.
4. Remove the side blower access panel.

   Loosen the four motor mount bolts.

6. Turn the motor adjustment bolt counterclockwise until the belt is slack enough to come off easily.
7. Remove the belt. Do **NOT** pry off belt.
8. Loosen set screw(s) on the outer half of the adjustable pulley.

Checking Pulley Alignment

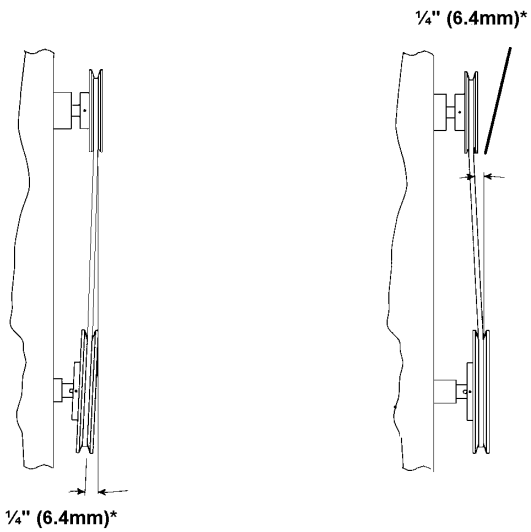

*Maximum Misalignment Allowed

9. The unit has one of two different types of adjustable pulleys.
10. Remove key if unit has a keyway type pulley.
11. To set the blower for a desired CFM (L/s), first turn the outer half of the adjustable pulley clockwise until it meets the inner half of the pulley.
12. Turn the outer half of the adjustable pulley counter clockwise the correct number of turns to obtain the desired CFM (L/s).

    NOTE: To increase the blower speed, turn the outer half of the adjustable pulley clockwise. To decrease the blower speed, turn the outer half of the adjustable pulley counter clockwise.

13. Replace key if unit has keyway type pulley.
14. Tighten set screw(s).
15. Put on belt.
16. Turn motor adjustment bolt clockwise until the belt has enough tension at the proper deflection. Use one of the commercially available belt tension gauges to set the correct tension at the proper deflection.
17. Use a straight edge (angle iron, straight piece of board or anything with a good straight surface or edge) to check the alignment of the blower pulley with blower motor pulley.
18. It may be necessary to back the tension off the belt temporarily and tighten one of the motor mount bolts before it is possible to adjust the angle of the blower motor.
19. Tighten all four blower motor mount bolts

Checking Tension and Deflection

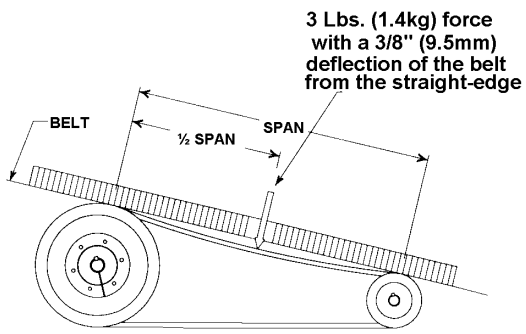

GENERAL SERVICE GUIDE

Symptom	Possible Trouble	Method of Finding
Compressor will not start.	Power off, loose electrical connections or fuse open. Compressor contactor not closing. Internal compressor thermal overload open. Compressor defective. High or low pressure switch open or defective. Oil pressure control open or defective.	Check disconnect switch, fuses and wiring. Check voltage to contactor coil, transformer, slave relay, thermostat. If compressor is hot, allow 2 hours to cool see below. Check compressor for electrical failure. Compressor may be seized, check for L.R.A. Check calibration of high or low pressure switch. Check oil failure control — see below.
Compressor starts but cuts out on low pressure switch	Low on refrigerant. Airflow restricted. Restriction in liquid line. Defective low pressure switch.	Check sightglass and check pressures. Check for dirty evaporator coil, dirty filters, dampers closed, iced evaporator, improper belt tension, broken belt, check motor amps, duct design. Check head pressure, check and adjust TXV if not functioning properly, check pressure drop across filter drier. Check calibration of switch.
Compressor starts but cuts out on high pressure switch	Refrigerant overcharged. Condenser fan control has incorrect setting. Fan motor defective. Condenser coil inlet obstructed or dirty. Air or non-condensables in system. Defective high pressure switch. Restriction in discharge or liquid line.	Check pressures, charge by subcooling. Check calibration of the low ambient control. Check fan motor Check coil and inlet clearances and for possible air recirculation. Check high side equalized pressure reading with equivalent outdoor temperature. Check calibration of switch. Check discharge and liquid line pressures, check TXV.
Compressor cuts out on thermal overload.	Low voltage. Sustained high discharge pressure. High suction and discharge pressures. Defective compressor overload. Defective run capacitor. Improper refrigerant charge. Bearings or pistons too tight. Allow time for compressor to cool.	Check voltage. Check running amperage and conditions described under high discharge pressure. Check TXV setting, check for air in system. Allow compressor to cool for two hours if compressor is hot. Recheck for open circuit. Check run capacitor for compressor and fan motor. Check subcooling. Check for low oil level. Check dome temperature of compressor.
Compressor cuts out on oil failure control (semi-herm.)	Low oil level. Defective oil pump. Defective control. Liquid refrigerant is entering crankcase.	Check crankcase bull's-eye - add to have oil level midway in sightglass. Check oil pump. Check oil failure control for calibration. Compressor will be wet. Check crankcase heater or cause for liquid feedback.
Noisy compressor	Scroll compressors are rotation sensitive. Refrigerant overcharged. Excess or insufficient oil in compressor crankcase. Liquid floodback. Tubing rattle. Compressor defective.	Reverse wiring at disconnect switch may require blower be rechecked for rotation. Check pressures and subcooling. Check oil level on hermetic compressors check total equivalent feet of piping, add oil as recommended. Check TXV Setting. Refrigerant overcharge refrigerant circuit problem. Dampen by taping or clamping, bend tubing away from contact where possible. Check internal parts (semi-herm.)

GENERAL SERVICE GUIDE CONTINUED

Symptom	Possible Trouble	Method of Finding
Noisy operation.	Blower rotational noise. Air noise. Chattering contactor. Tubing rattle.	Check blower, motor and drive for faulty adjustment or noisy bearings, loose parts, blower out of balance. Check ductwork. Air velocity too high. Check for adequate control voltage, check for shorts or breaks, check thermostat, check contactor points. Dampen by taping or clamping, bend tubing away from contact where possible.
High suction pressure.	Excessive load on evaporator coil. Broken compressor valves. Scroll compressors do not have valves. Compressor is unloaded. Leaking check valve. Expansion valve not secured to suction line or TXV defective.	Check for high entering wet bulb temperature. Check for excessive airflow. Remove head (semi-herm.) inspect valve reeds. Scroll compressors should not be pumped down below 5 PSI. Re-calibrate unloader pressure switch. Check temperature across check valve. Check the TXV, ensure bulb is insulated.
High discharge pressure.	TXV setting. Air inlet to condenser dirty or obstructed. Condenser fan, motor defective. Condenser fan control has incorrect setting.	Check TXV setting and calibrate superheat. Check for proper clearances and possible air recirculation. Check condenser fan motor and run capacitor. Check calibration of low ambient head pressure control.
Suction pressure too low.	Refrigerant undercharge. Blower running backwards Loose blower, pulley or belts. Defective or improperly adjusted expansion valve. Dirty filter. Too little air flow or low entering air temperature. Restriction in suction or liquid line.	Check pressures and subcooling. Interchange any two wires from 3 phase disconnect. Check drive, pulley alignment, belt tension. Check superheat and adjust TXV. Check filter and evaporator coil. Check airflow and entering air wet bulb conditions. Check refrigerant circuit for restriction.
Head pressure too low.	Insufficient refrigerant charge. Defective or improperly adjusted expansion valve. Low suction pressure. Condenser fan control setting. Defective compressor.	Check subcooling, check for leak. Check superheat and adjust TXV. See above — suction pressure too low. Check calibration of low ambient control. See above — high suction pressure.
Compressor short cycles.	Thermostat location or malfunction. Improper refrigerant charge. Defective high or low pressure control. Cycling on internal overload. Defective expansion valve. Poor air distribution. High discharge pressure. Leaking discharge valves in compressor.	Check thermostat, check heat anticipator setting. Check subcooling, verify superheat. Check high or low pressure switch. Possible tight bearings — see above. Check TXV and superheat. Check ductwork for recirculation. See above — high discharge pressure. See above — high suction pressure.

GENERAL SERVICE GUIDE CONTINUED

Symptom	Possible Trouble	Method of Finding
Running cycle too long or unit operates continuously.	Refrigerant undercharged. Dirty filter or evaporator coil. Dirty or clogged condenser coil. Air or other non-condensables in system. Defective compressor. Restriction in suction and liquid line. Control contacts stuck.	Check subcooling. Check filter, coil and airflow. Check coil and airflow. Check equalized high side pressure with equivalent outdoor temperature. See above — high suction pressure. Check for restrictions in refrigerant circuit. Check thermostat, shorts in wiring, slave relay compressor contactor.
Supply air temperature too high.	Refrigerant undercharge or leak in system. Evaporator plugged with dirt or ice. Improperly adjusted or defective expansion valve. Defective compressor. High discharge pressure. Airflow is too high.	Check subcooling and check for leaks. Check evaporator, airflow and filter. Check superheat and adjust TXV, check bulb. Check compressor for proper operation. See above — high discharge pressure. Check external static pressure.
Supply air temperature too low.	Airflow is to low. Return air temperature too low.	Check evaporator coil, filter, check for closed dampers, grills, drive for loose parts, belts, misalignment, check external static pressure. Check entering air wet bulb conditions.
Liquid line too hot.	Refrigerant undercharged. High discharge pressure	Charge by subcooling. See above — high discharge pressure.
Liquid line frosted or wet.	Restriction in liquid line.	Restriction upstream of point of frosting.
Suction line frosting.	Insufficient evaporator airflow. Restriction in suction or liquid line. Malfunctioning or defective expansion valve.	Check airflow, check drive for loose parts, belts, closed dampers. Restriction upstream of point of frosting. Check bulb of TXV.
Blower motor not running.	Improper wiring. Defective motor. Defective thermostat or control circuit. Motor off on overload protector.	Check wiring diagram. Check motor and controller. Check "R" and "G" Circuit. Allow motor to cool, check amperage.

NOTES

NOTES

Installation Code and Annual Inspections:
All installations and service of ADDISON equipment must be performed by a contractor qualified in the installation and service of equipment sold and supplied by Addison and conform to all requirements set forth in the ADDISON manuals and all applicable governmental authorities pertaining to the installation, service and operation of the equipment. To help facilitate optimum performance and safety, Addison recommends that a qualified contractor annually inspect your ADDISON equipment and perform service where necessary, using only replacement parts sold and supplied by ADDISON.

Further Information: Applications, engineering and detailed guidance on systems design, installation and equipment performance is available through ADDISON representatives. Please contact us for any further information you may require, including the Installation, Operation and Service Manual.

These products are not for residential use.

This document is intended to assist licensed professionals in the exercise of their professional judgment.

7050 Overland Road
Orlando, FL 32810 USA
Telephone: 407.292.4400
Fax: 407.290.1329
www.addison-hvac.com

Printed in the USA